A

Seminar report

On

PILL CAMERA

Submitted in partial fulfillment of the requirement for the award of degree
Of Computer Science

SUBMITTED TO:

www.studymafia.org

SUBMITTED BY:

www.studymafia.org

Preface

I have made this report file on the topic **PILL CAMERA,** I have tried my best to elucidate all the relevant detail to the topic to be included in the report. While in the beginning I have tried to give a general view about this topic.

My efforts and wholehearted co-corporation of each and everyone has ended on a successful note. I express my sincere gratitude to ……..who assisting me throughout the prepration of this topic. I thank him for providing me the reinforcement, confidence and most importantly the track for the topic whenever I needed it.

Acknowledgement

I would like to thank respected Mr…….. and Mr. ……..for giving me such a wonderful opportunity to expand my knowledge for my own branch and giving me guidelines to present a seminar report. It helped me a lot to realize of what we study for.

Secondly, I would like to thank my parents who patiently helped me as i went through my work and helped to modify and eliminate some of the irrelevant or un-necessary stuffs.

Thirdly, I would like to thank my friends who helped me to make my work more organized and well-stacked till the end.

Next, I would thank Microsoft for developing such a wonderful tool like MS Word. It helped my work a lot to remain error-free.

Last but clearly not the least, I would thank The Almighty for giving me strength to complete my report on time.

Abstract:

The aim of technology is to make products in a large scale for cheaper prices and increased quality. The current technologies have attained a part of it, but the manufacturing technology is at macro level. The future lies in manufacturing product right from the molecular level. Research in this direction started way back in eighties. At that time manufacturing at molecular and atomic level was laughed about. But due to advent of nanotechnology we have realized it to a certain level.

One such product manufactured is PILL CAMERA, which is used for the treatment of cancer, ulcer and anemia. It has made revolution in the field of medicine. This tiny capsule can pass through our body, without causing any harm. We have made great progress in manufacturing products. Looking back from where we stand now, we started from flint knives and stone tools and reached the stage where we make such tools with more precision than ever. The leap in technology is great but it is not going to stop here. With our present technology we manufacture products by casting, milling, grinding, chipping and the likes.

With these technologies we have made more things at a lower cost and greater precision than ever before. In the manufacture of these products we have been arranging atoms in great thundering statistical herds. All of us know manufactured products are made from atoms. The properties of those products depend on how those atoms are arranged. If we rearrange atoms in dirt, water and air we get grass. The next step in manufacturing technology is to manufacture products at molecular level.

The technology used to achieve It takes pictures of our intestine and transmits the same to the receiver of the Computer analysis of our digestive system. This process can help in tracking any kind of disease related to digestive system. Also we have discussed the drawbacks of PILL CAMERA and how these drawbacks can be overcome using Grain sized motor and bi - directional wireless telemetry capsule.

Introduction:

We have made great progress in manufacturing products. Looking back from where we stand now, we started from flint knives and stone tools and reached the stage where we make such tools with more precision than ever. The leap in technology is great but it is not going to stop here. With our present technology we manufacture products by casting, milling, grinding, chipping and the likes.

With these technologies we have made more things at a lower cost and greater precision than ever before. In the manufacture of these products we have been arranging atoms in great thundering statistical herds. All of us know manufactured products are made from atoms. The properties of those products depend on how those atoms are arranged. If we rearrange atoms in dirt, water and air we get grass.

The next step in manufacturing technology is to manufacture products at molecular level. The technology used to achieve manufacturing at molecular level is "NANOTECHNOLOGY". Nanotechnology is the creation of useful materials, devices and system through manipulation of such miniscule matter (nanometer).Nanotechnology deals with objects measured in nanometers. Nanometer can be visualized as billionth of a meter or millionth of a millimeter or it is 1/80000 width of human hair.

Imagine a vitamin pill-sized camera that could travel through your body taking pictures, helping diagnose a problem which doctor previously would have found only through surgery. No longer is such technology the stuff of science fiction films.

Existing System:

Currently, standard method of detecting abnormalities in the intestines is through endoscopic examination in which doctors advance a scope down into the small intestine via the mouth.

However, these scopes are unable to reach through all of the 20-foot-long small intestine, and thus provide only a partial view of that part of the bowel. With the help of pill camera not only can diagnoses be made for certain conditions routinely missed by other tests, but disorders can be detected at an earlier stage, enabling treatment before complications develop.

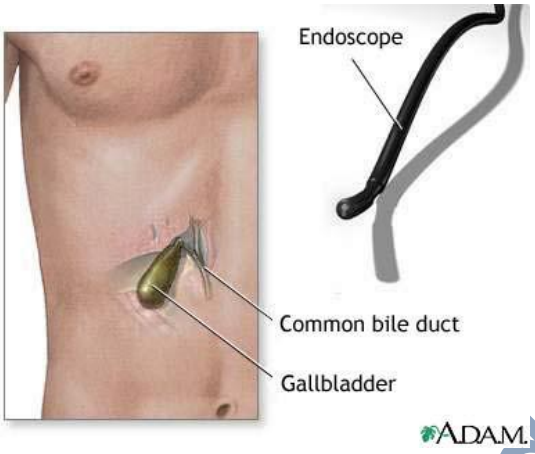

Description:

The device, called the given Diagnostic Imaging System, comes in capsule form and contains a camera, lights, transmitter and batteries. The capsule has a clear end that allows the camera to view the lining of the small intestine.

Capsule endoscopy consists of a disposable video camera encapsulated into a pill like form that is swallowed with water. The wireless camera takes thousands of high-quality digital images within the body as it passes through the entire length of the small intestine. The latest pill camera is sized at 26*11 mm and is capable of transmitting 50,000 color images during its traversal through the digestive system of patient.

Video chip consists of the IC CMOS image sensor which is used to take pictures of intestine .The lamp is used for proper illumination in the intestine for taking photos. Micro actuator acts as memory to store the software code that is the instructions.

The antenna is used to transmit the images to the receiver. For the detection of reliable and correct information, capsule should be able to designed to transmit several biomedical signals, such as pH, temp and pressure. This is achieved with the help of Soc.

Proposed System:

The capsule is the size and shape of a pill and contains a tiny camera. After a patient swallows the capsule, it takes pictures of the inside of the gastrointestinal tract.

The primary use of capsule endoscopy is to examine areas of the small intestine that cannot be seen by other types of endoscopy such as colonoscopy or esophagogastroduodenoscopy (EGD). This type of examination is often done to find sources of bleeding or abdominal pain.

Working:

It is slightly larger than normal capsule. The patient swallows the capsule and the natural muscular waves of the digestive tract propel it forward through stomach, into small intestine, through the large intestine, and then out in the stool. It takes snaps as it glides through digestive tract twice a second.

The capsule transmits the images to a data recorder, which is worn on a belt around the patient's waist while going about his or her day as usual. The physician then transfers the stored data to a computer for processing and analysis. The complete traversal takes around eight hours and after it has completed taking pictures it comes out of body as excreta.

Study results showed that the camera pill was safe, without any side effects, and was able to detect abnormalities in the small intestine, including parts that cannot be reached by the endoscope

The tiniest endoscope yet takes 30 two-megapixel images per second and offloads them wirelessly. See how it works inside the body in an animation

Pop this pill, and eight hours later, doctors can examine a high-resolution video of your intestines for tumors and other problems, thanks to a new spinning camera that captures images in 360 degrees. Developed by the Japanese RF System Lab, the Sayaka endoscope capsule enters clinical trials in the U.S. this month.

The patient gulps down the capsule, and the digestive process begins. Over the next eight hours, the pill travels passively down the esophagus and through roughly 20 to 25 feet of intestines, where it will capture up to 870,000 images. The patient feels nothing.

Power Up

The Sayaka doesn’t need a motor to move through your gut, but it does require 50 milliwatts to run its camera, lights and computer. Batteries would be too bulky, so the cam draws its power through induction charging. A vest worn by the patient contains a coil that continuously transmits power.

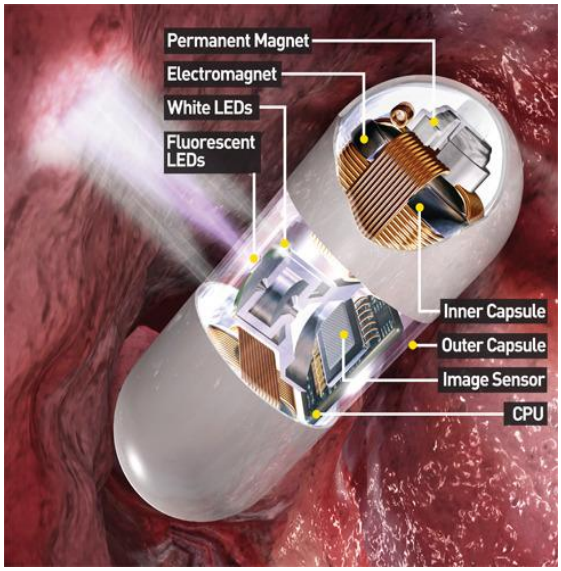

Start Snapping

When it reaches the intestines, the Sayaka cam begins capturing 30 two-megapixel images per second (twice the resolution of other pill cams). Fluorescent and white LEDs in the pill illuminate the tissue walls.

Spin For Close-Ups

Previous pill cameras place the camera at one end, facing forward, so the tissue walls are visible only in the periphery of their photos. Sayaka is the first that gets a clearer picture by mounting the camera facing the side and spinning 360 degrees so that it shoots directly at the tissue walls.

As the outer capsule travels through the gut, an electromagnet inside the pill reverses its polarity. This causes a permanent magnet to turn the inner capsule and the image sensor 60 degrees every two seconds. It completes a full swing every 12 seconds—plenty of time for repeated close-ups, since the capsule takes about two minutes to travel one inch.

Offload Data

Instead of storing each two-megapixel image internally, Sayaka continually transmits shots wirelessly to an antenna in the vest, where they are saved to a standard SD memory card.

Deliver Video

Doctors pop the SD card into a PC, and software compiles thousands of overlapping images into a flat map of the intestines that can be as large as 1,175 megapixels. Doctors can replay the ride as video and magnify a problem area up to 75-fold to study details.

Leave the Body

At around $100, the cam is disposable, so patients can simply flush it away.

The below is the block diagram of receiver that receives the pictures snapped by the camera inside the stomache.

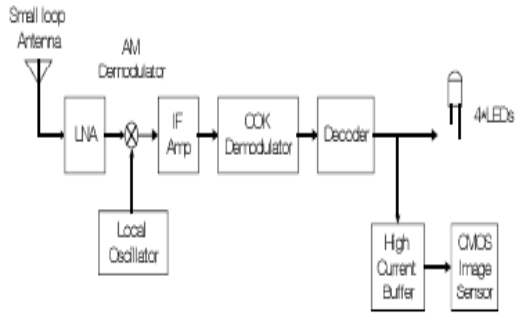

Fig. 3. Receiver circuit inside capsule.

Advantages:

- Biggest impact on the medical industry.
- Nanorobots can perform delicate surgeries.
- They can also change the physical appearance.
- They can slow or reverse the aging process.
- Used to shrink the size of components.
- Nano technology has the potential to have a positive effect on the Environment.

Drawbacks & Remedies:

It is a revolution, no question about it but the capsule poses medical risks

1."Unfortunately, patients with gastrointestinal structures or narrowing are not good candidates for this procedure due to the risk of obstruction". It might also happen that the pill camera might not be able to traverse freely inside digestive system, which may cause the tests to be inconclusive.

2. If there is a partial obstruction in the small intestine, there is a risk that the pill will get stuck there and a patient who might have come in for diagnostical reasons may end up in the emergency room for intestinal obstruction.

3. The pill camera can transmit image from inside to outside the body. Consequently it becomes impossible to control the camera behavior, including the on/off power functions and effective illuminations inside the intestine.

The first drawback is overcomed using another product manufactured with the help of nanotechnology which is the rice- grain sized motor. This miniature motor, when attached to the pill camera gives it a propelling action inside the body, which makes it easy for the pill to find its way through the digestive system.

Also the grain-sized motor has an application of its own too. It can be employed to rupture and break painful kidney stones inside the body. The other two drawbacks can be overcome using a bidirectional wireless telemetry camera.

The bidirectional wireless telemetry camera, 11mm in diameter, can transmit video images from inside the human body and receive the control signals from an external control unit. It includes transmitting antenna and receiving antenna, a demodulator, a decoder, four LED's, a CMOS image sensor, along with their driving circuits.

The receiver demodulates the received signal that is radiated from the external control unit. Next, the decoder receives this serial stream and interprets the five of the binary digits as address code. The remaining signal is interpreted as binary data.

As a result proposed telemetry model can demodulate the external signals to control the behavior of the camera and 4 LED's during the transmission of video image.

The CMOS image sensor is a single chip 1/3 inch format video camera, OV7910, this can provide high level functionality with in small print footage.

The image sensor supports an NTSC-type analog color video and can directly interface with VCR TV monitor. Also image sensor has very low power consumption as it requires only 5 volt dc supply.

Conclusion:

Though nanotechnology has not evolved to its full capacity yet the first rung of products have already made an impact on the market. In the near future most of the conventional manufacturing processes will be replaced with a cheaper and better manufacturing process "nanotechnology".

Scientists predict that this is not all nanotechnology is capable of. They even foresee that in the decades to come, with the help of nanotechnology one can make hearts, lungs, livers and kidneys, just by providing coal, water and some impurities and even prevent the aging effect.

Nanotechnology has the power to revolutionize the world of production, but it is sure to increase unemployment.

Bibilography:

- http://en.wikipedia.org/wiki/Capsule_endoscopy
- http://www.medicaldiscoverynews.com/shows/pillCamera.html
- http://www.usatoday.com/tech/news/techinnovations/2008-02-07-pill-camera_N.htm
- http://www.authorstream.com/Presentation/shamimanazim-668821-pillcam/
- http://spectrum.ieee.org/biomedical/devices/a-better-camera-pill
- http://www.buzzle.com/articles/does-camera-pill-work.html